Material number: 1324.001.048 **9 S 1310 TO / KAMAZ PUBLIC JOINT STOCK COMPANY**

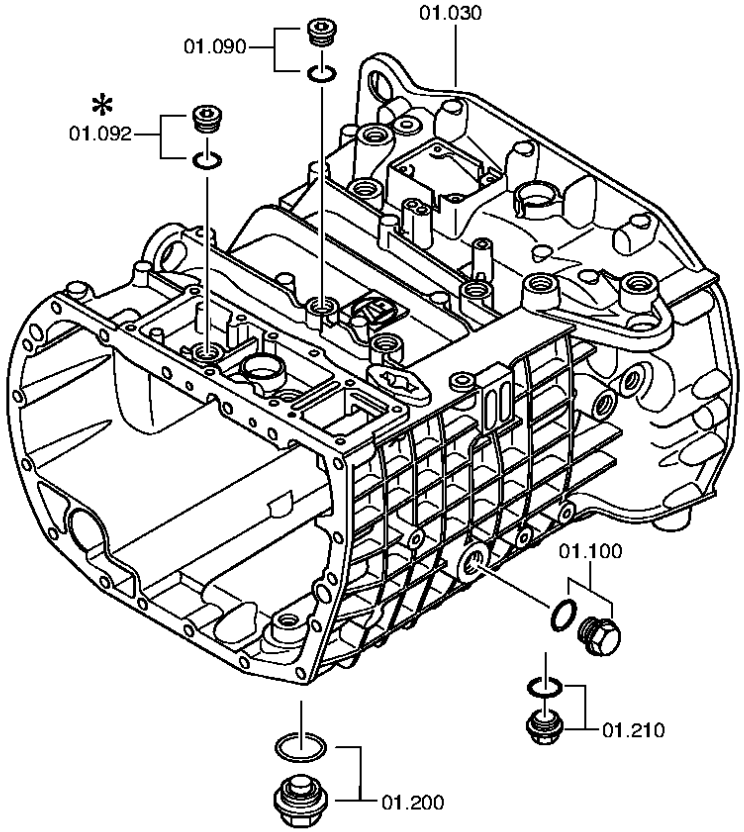

Material number: 1324.001.048 **9 S 1310 TO / KAMAZ PUBLIC JOINT STOCK COMPANY**

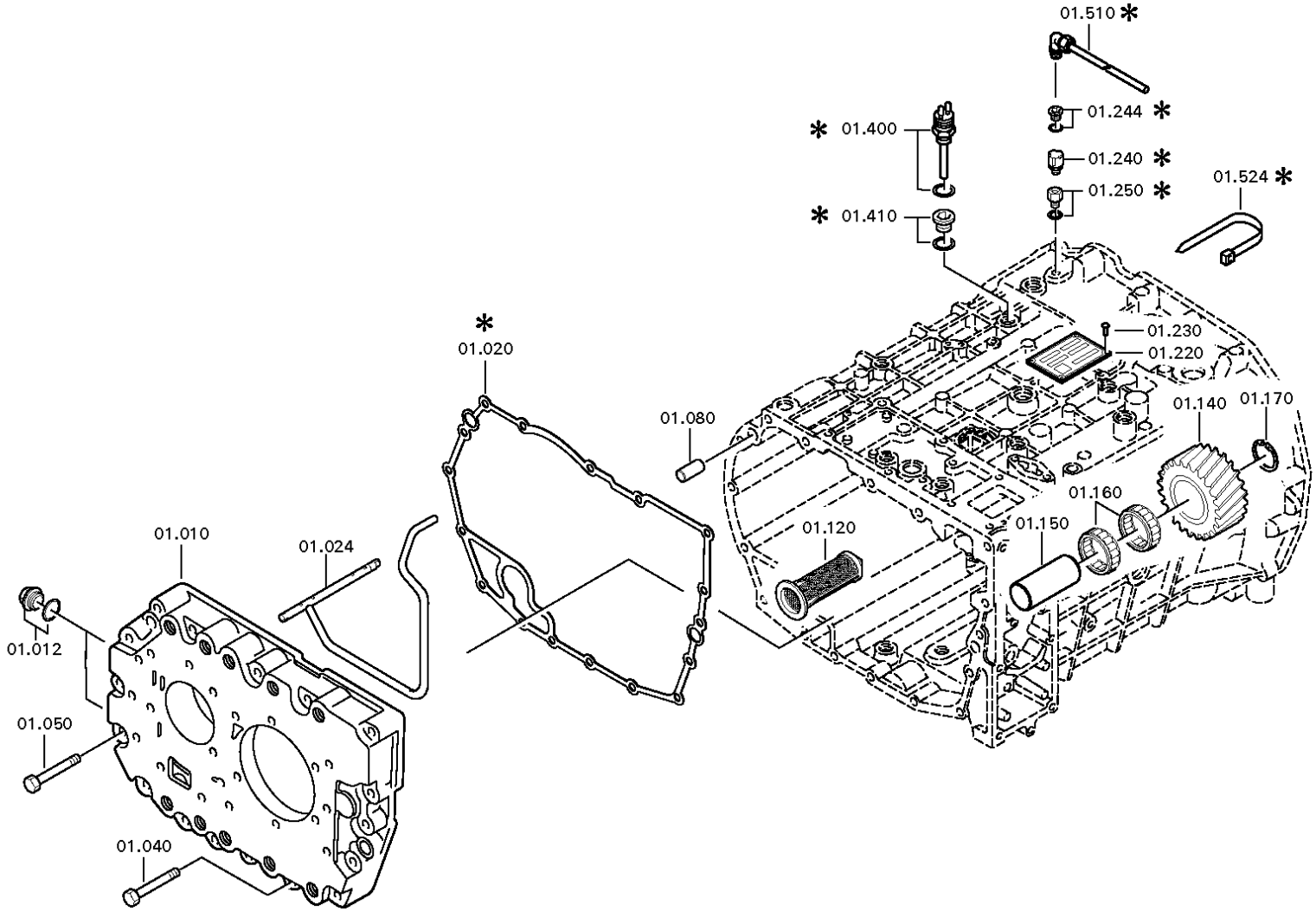

Material number: 1324.001.048 **9 S 1310 TO / KAMAZ PUBLIC JOINT STOCK COMPANY**

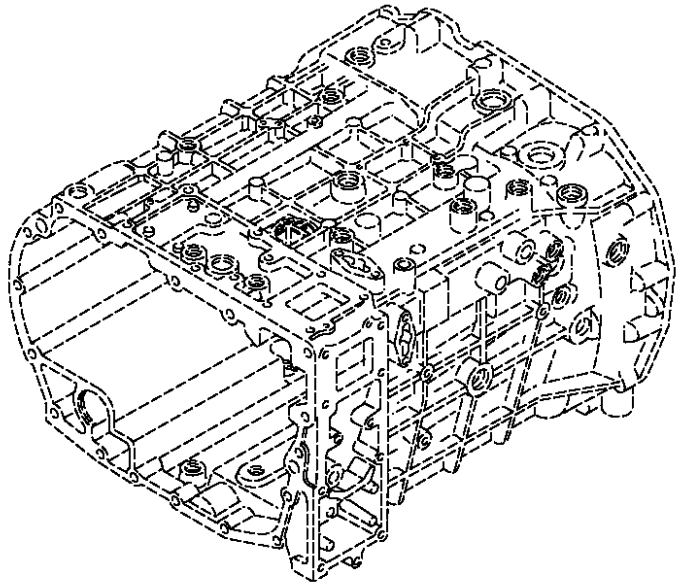

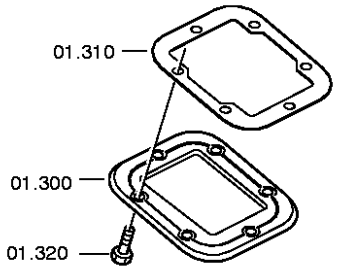

Material number: 1324.001.048 **9 S 1310 TO / KAMAZ PUBLIC JOINT STOCK COMPANY**

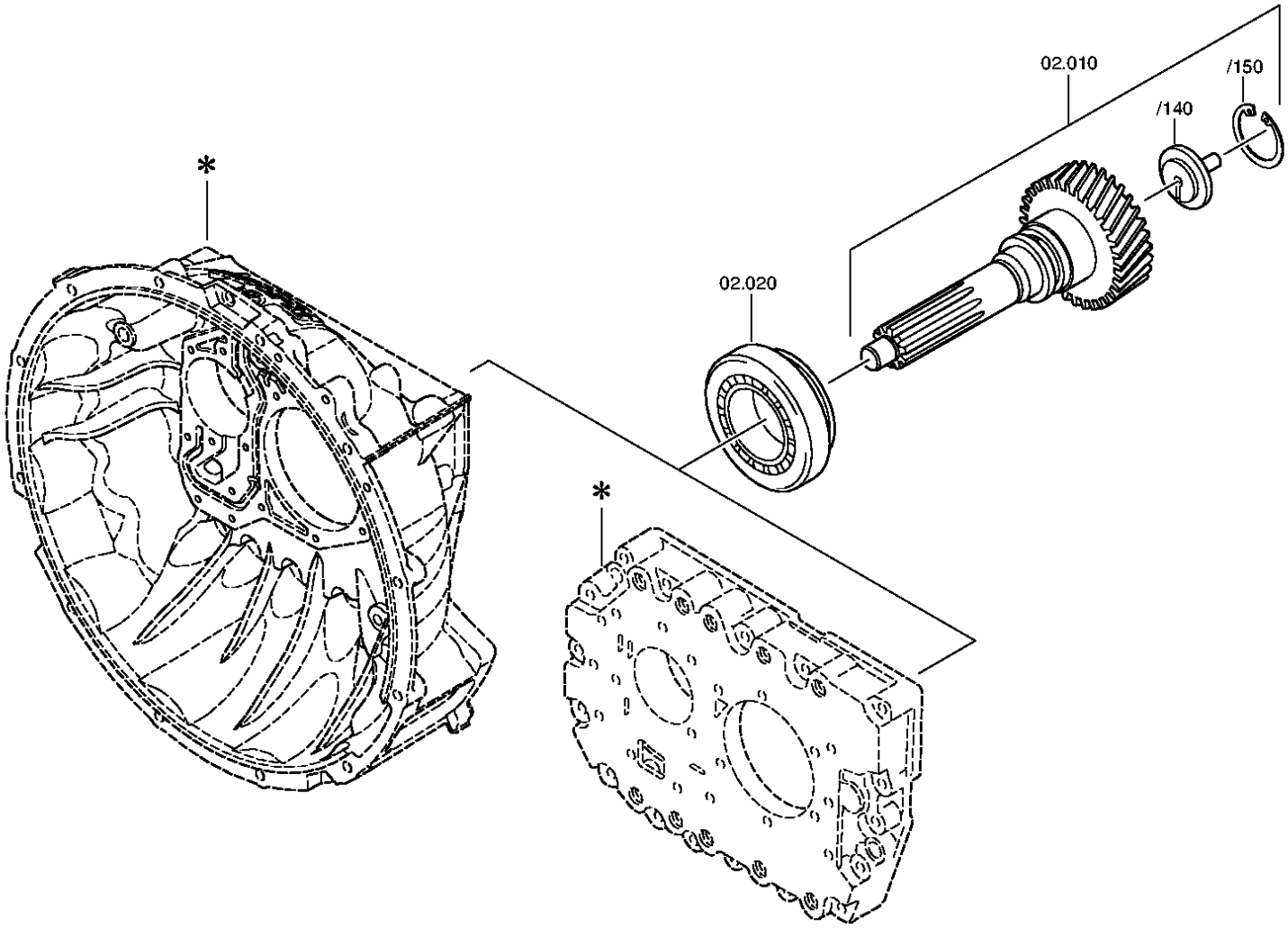

Material number: 1324.001.048 **9 S 1310 TO / KAMAZ PUBLIC JOINT STOCK COMPANY**

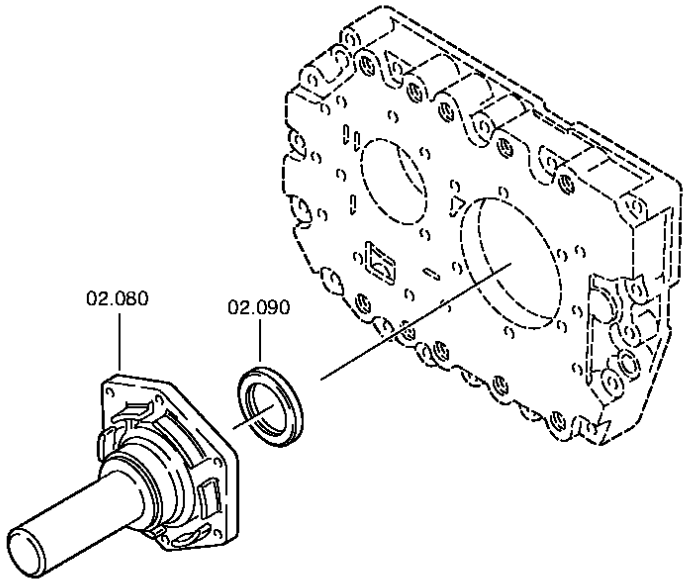

Material number: 1324.001.048 **9 S 1310 TO / KAMAZ PUBLIC JOINT STOCK COMPANY**

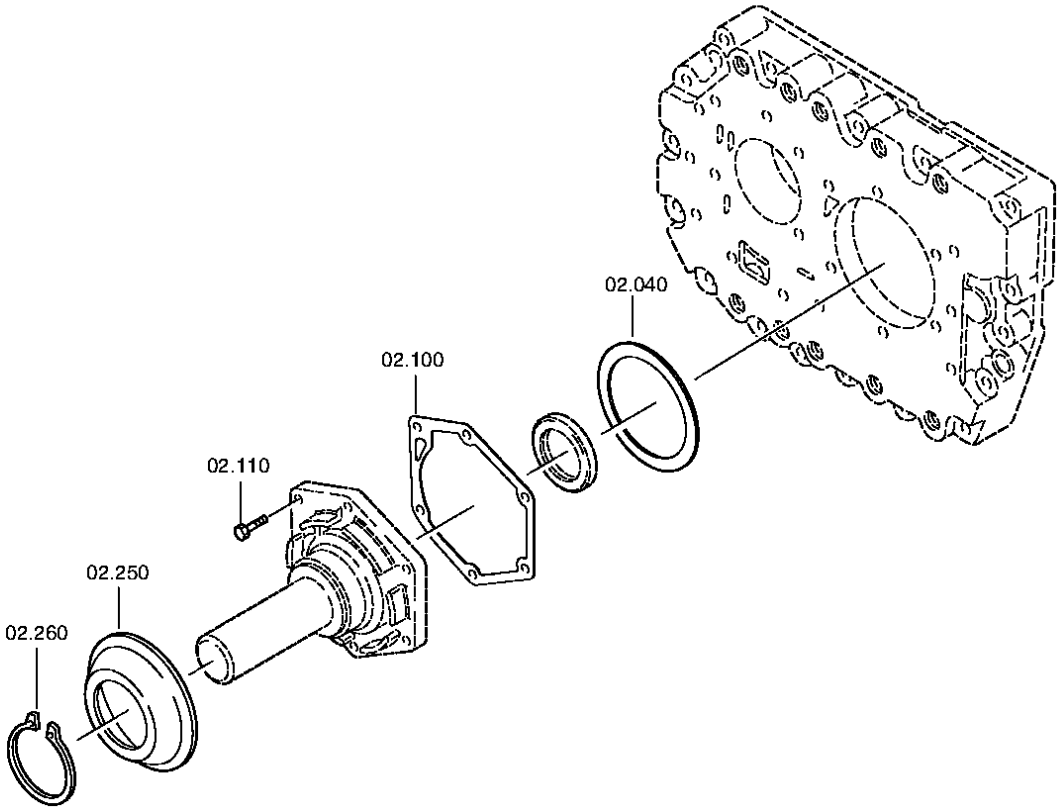

Material number: 1324.001.048 **9 S 1310 TO / KAMAZ PUBLIC JOINT STOCK COMPANY**

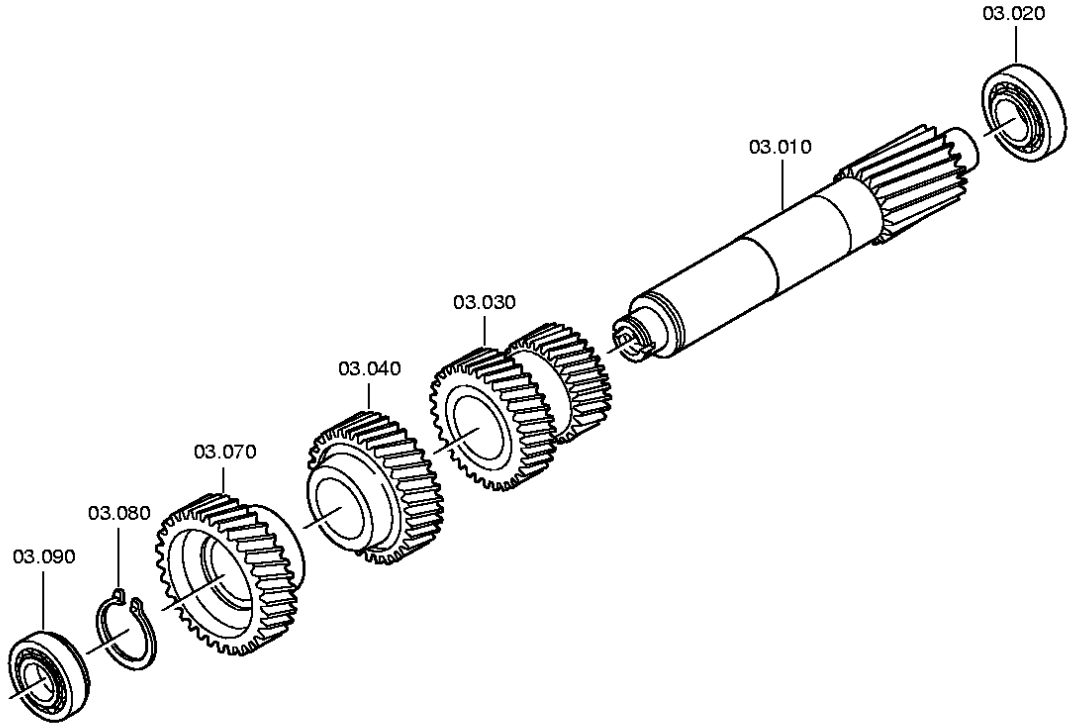

Material number: 1324.001.048 **9 S 1310 TO / KAMAZ PUBLIC JOINT STOCK COMPANY**

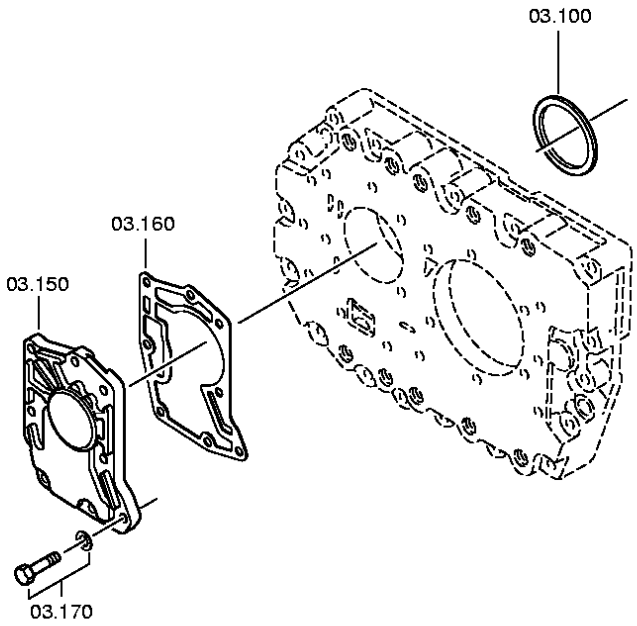

Material number: 1324.001.048 **9 S 1310 TO / KAMAZ PUBLIC JOINT STOCK COMPANY**

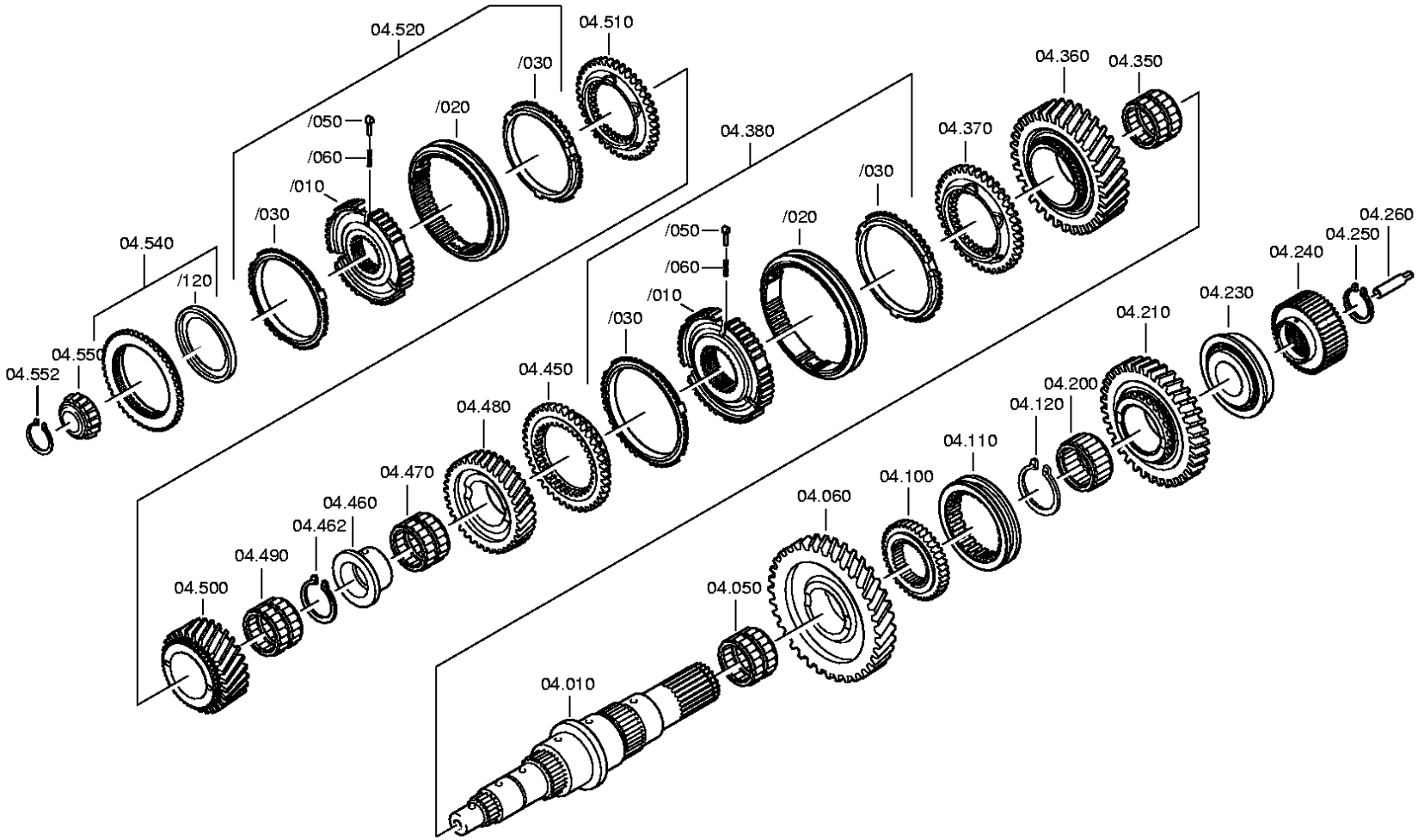

Material number: 1324.001.048 **9 S 1310 TO / KAMAZ PUBLIC JOINT STOCK COMPANY**

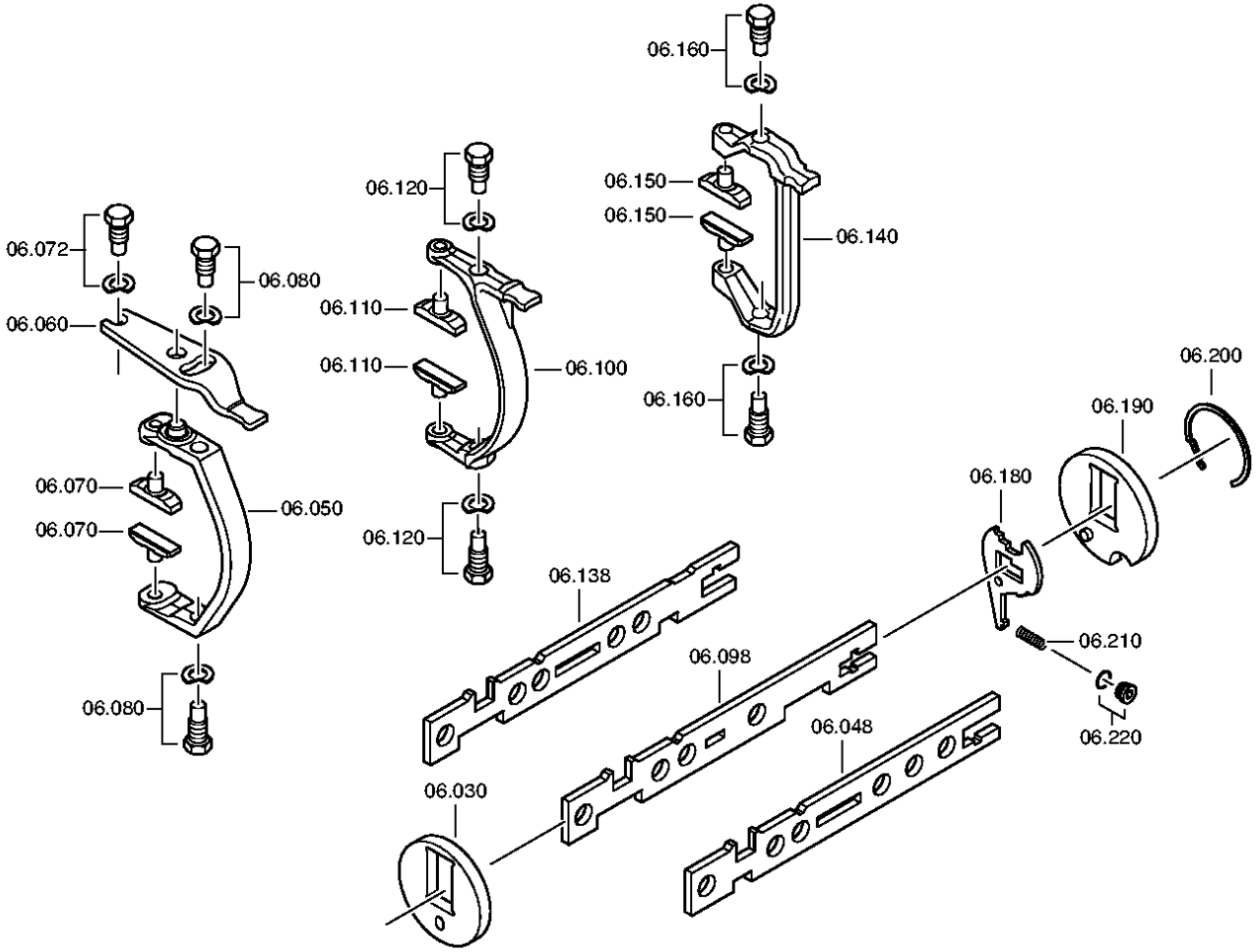

Material number: 1324.001.048 **9 S 1310 TO / KAMAZ PUBLIC JOINT STOCK COMPANY**

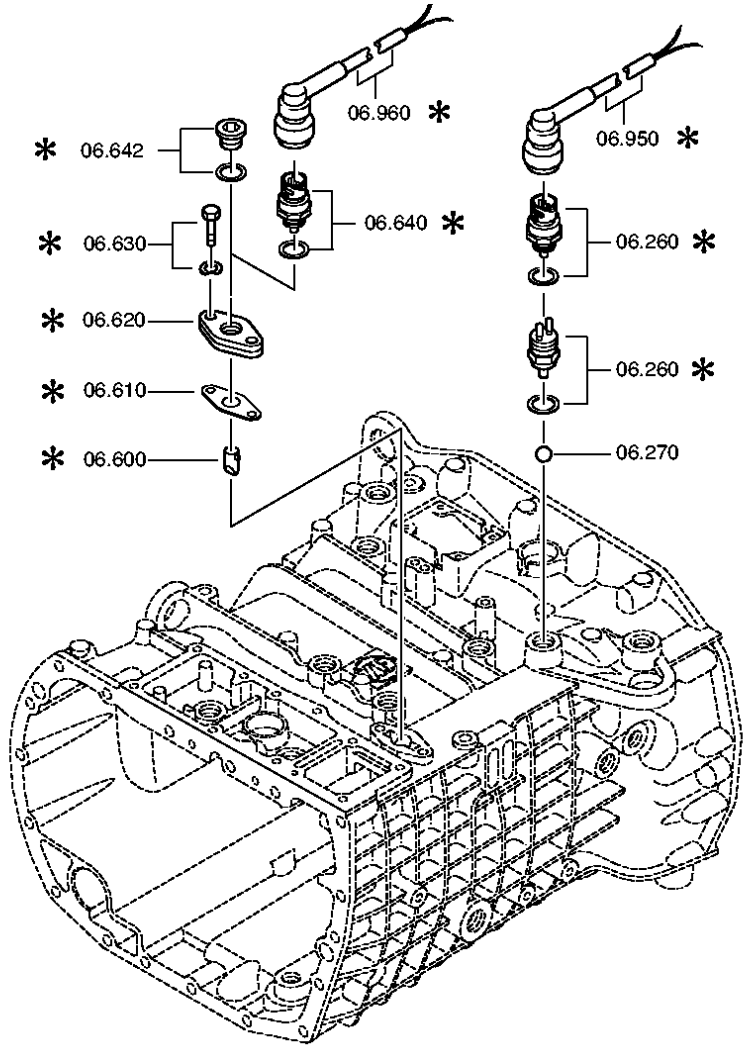

Material number: 1324.001.048 **9 S 1310 TO / KAMAZ PUBLIC JOINT STOCK COMPANY**

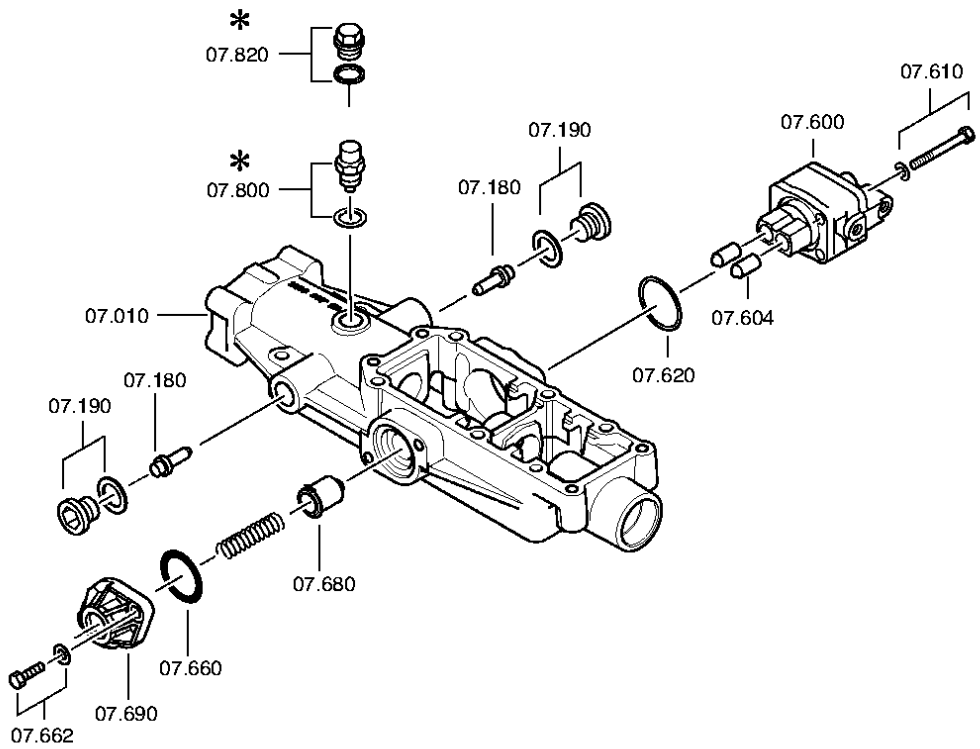

Material number: 1324.001.048 **9 S 1310 TO / KAMAZ PUBLIC JOINT STOCK COMPANY**

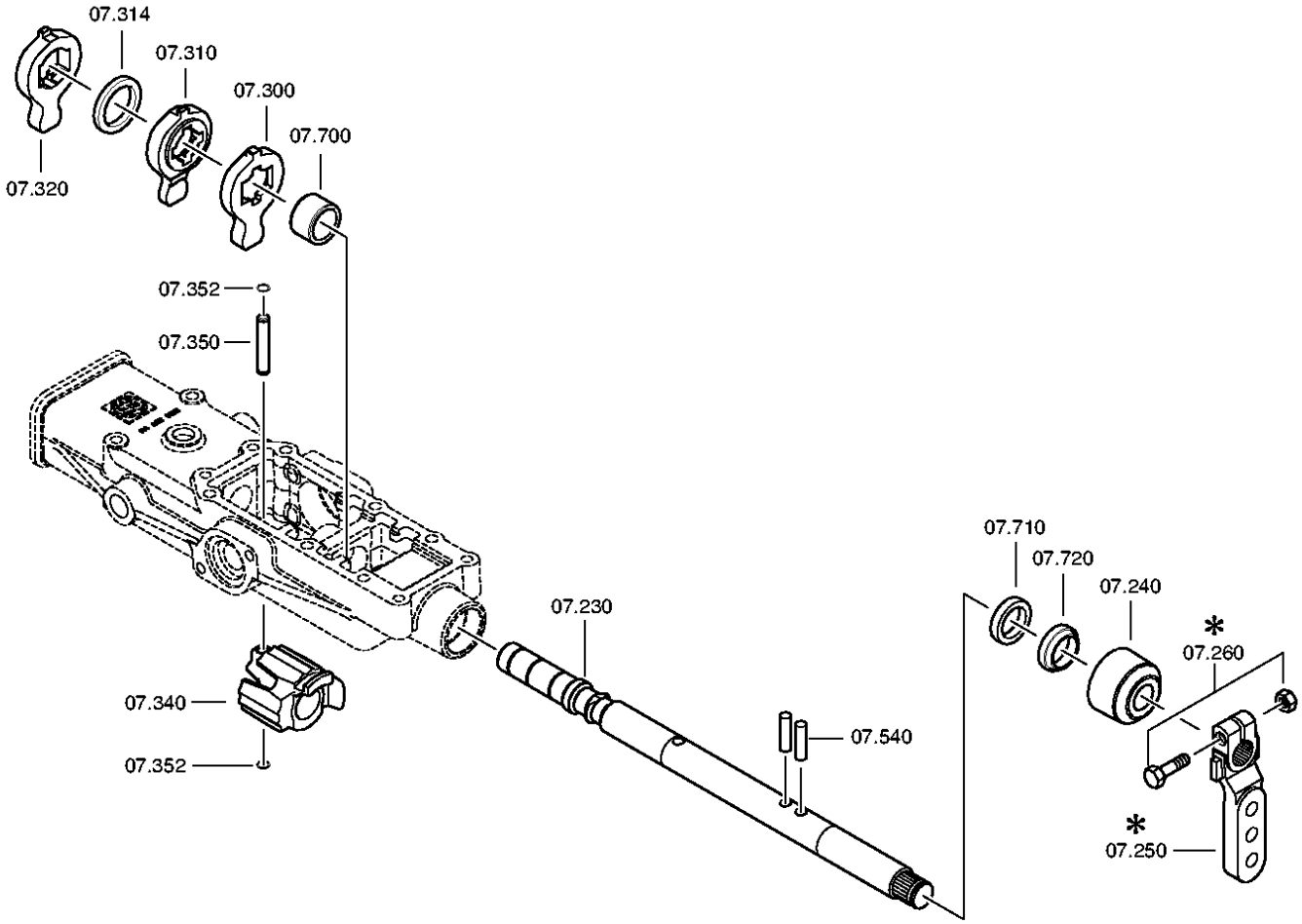

Material number: 1324.001.048 **9 S 1310 TO / KAMAZ PUBLIC JOINT STOCK COMPANY**

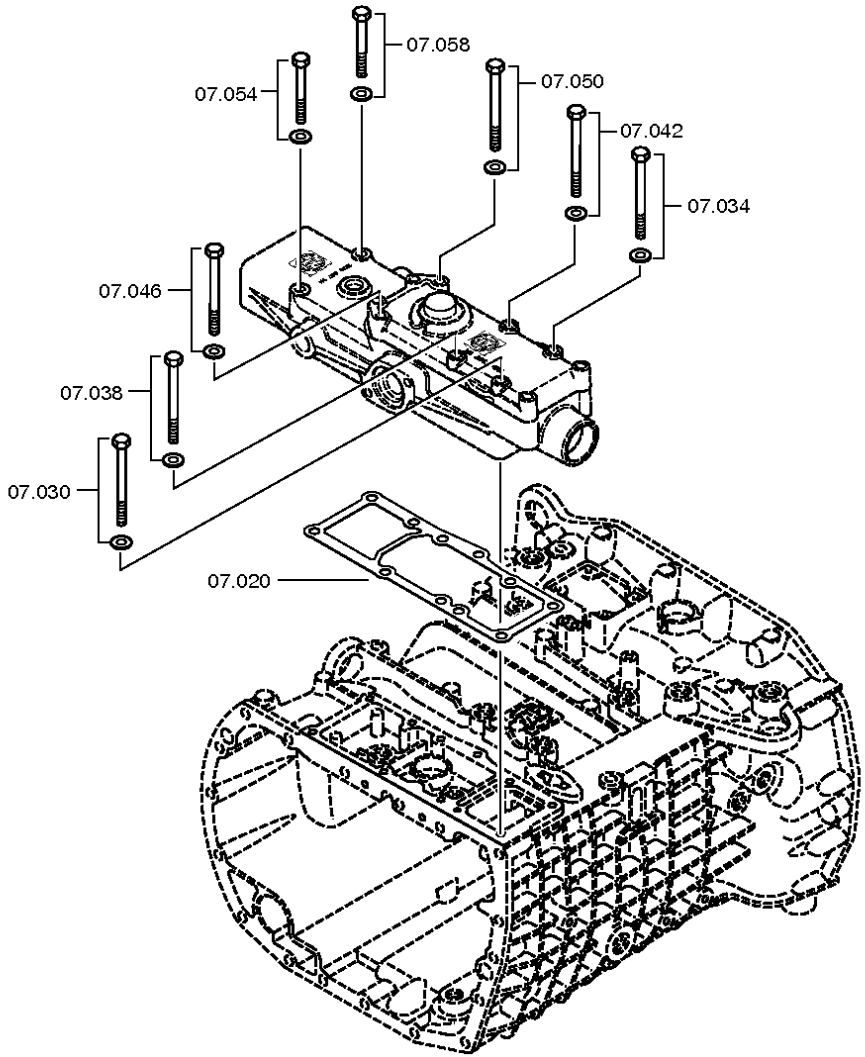

Material number: 1324.001.048 **9 S 1310 TO / KAMAZ PUBLIC JOINT STOCK COMPANY**

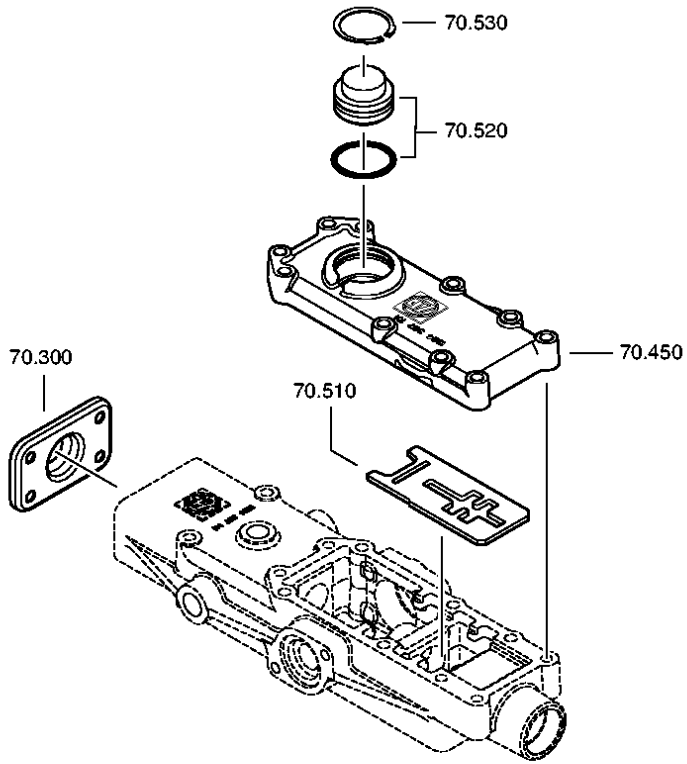

Material number: 1324.001.048 **9 S 1310 TO / KAMAZ PUBLIC JOINT STOCK COMPANY**

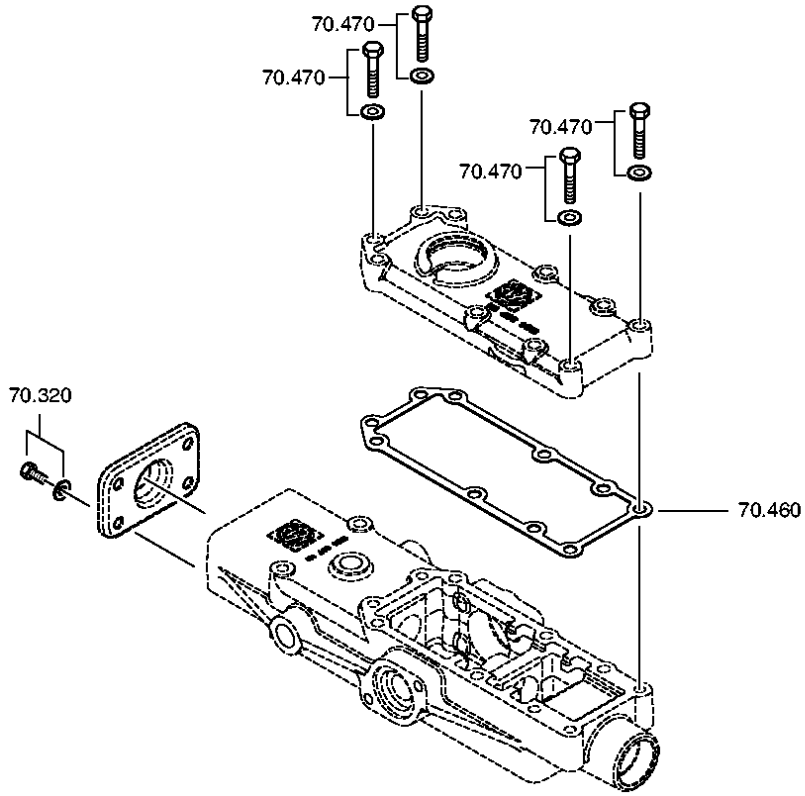

Material number: 1324.001.048 **9 S 1310 TO / KAMAZ PUBLIC JOINT STOCK COMPANY**

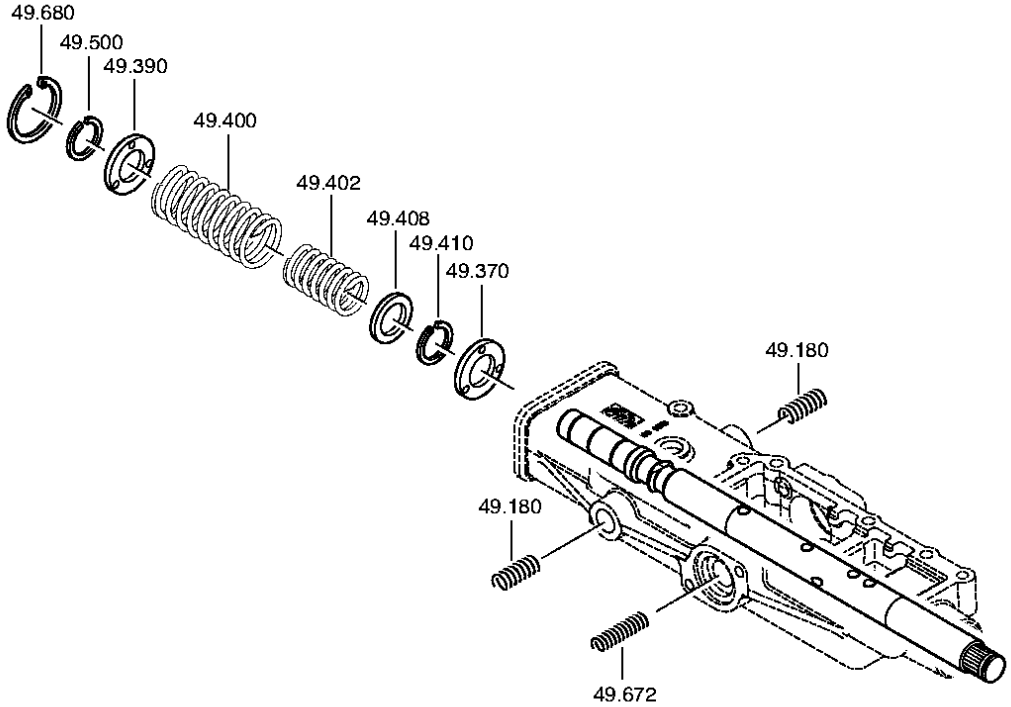

Material number: 1324.001.048 **9 S 1310 TO / KAMAZ PUBLIC JOINT STOCK COMPANY**

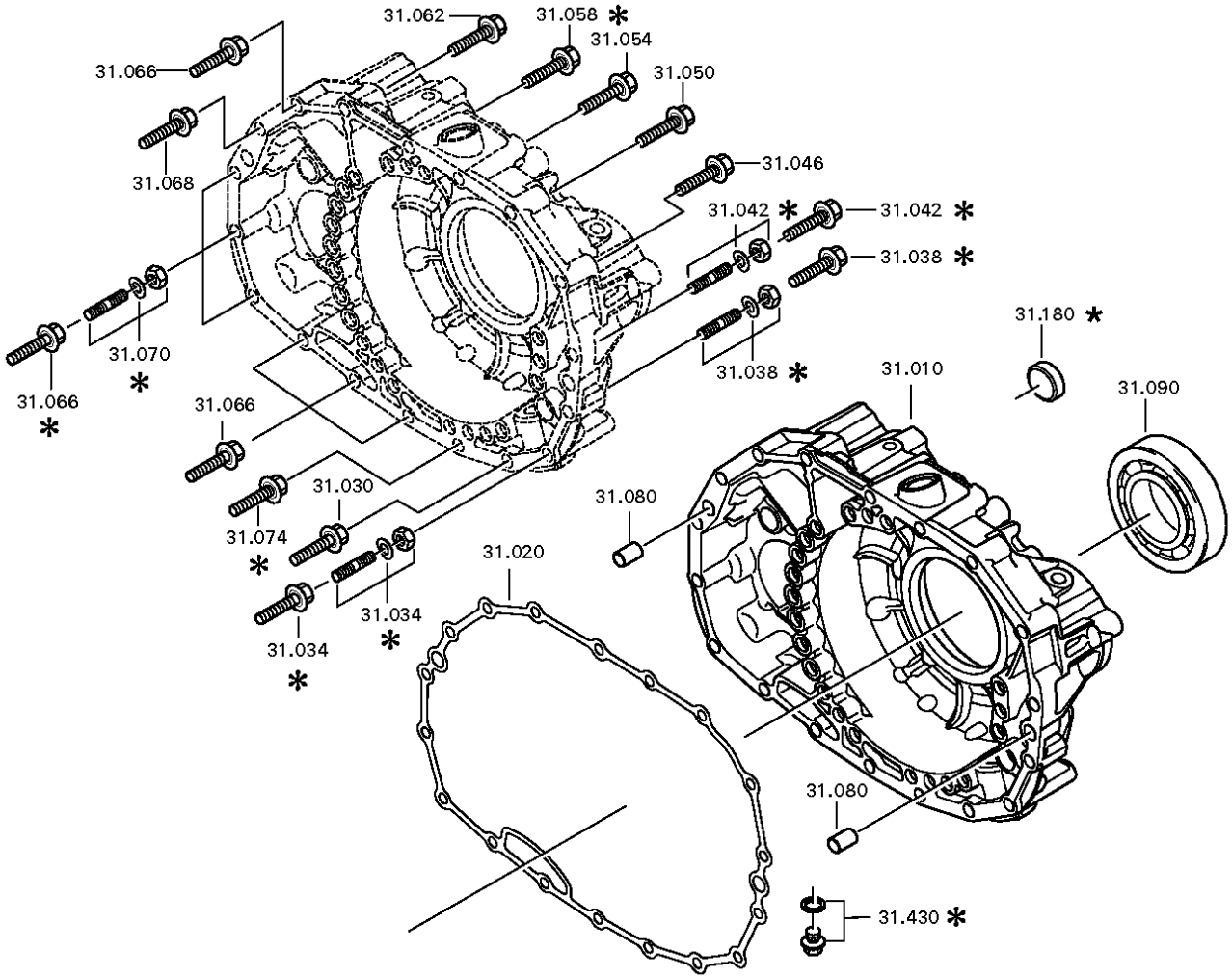

Material number: 1324.001.048 **9 S 1310 TO / KAMAZ PUBLIC JOINT STOCK COMPANY**

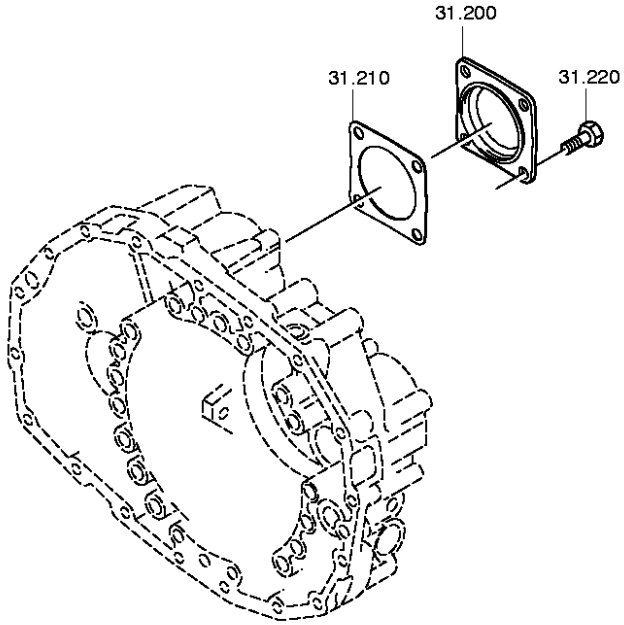

Material number: 1324.001.048 **9 S 1310 TO / KAMAZ PUBLIC JOINT STOCK COMPANY**

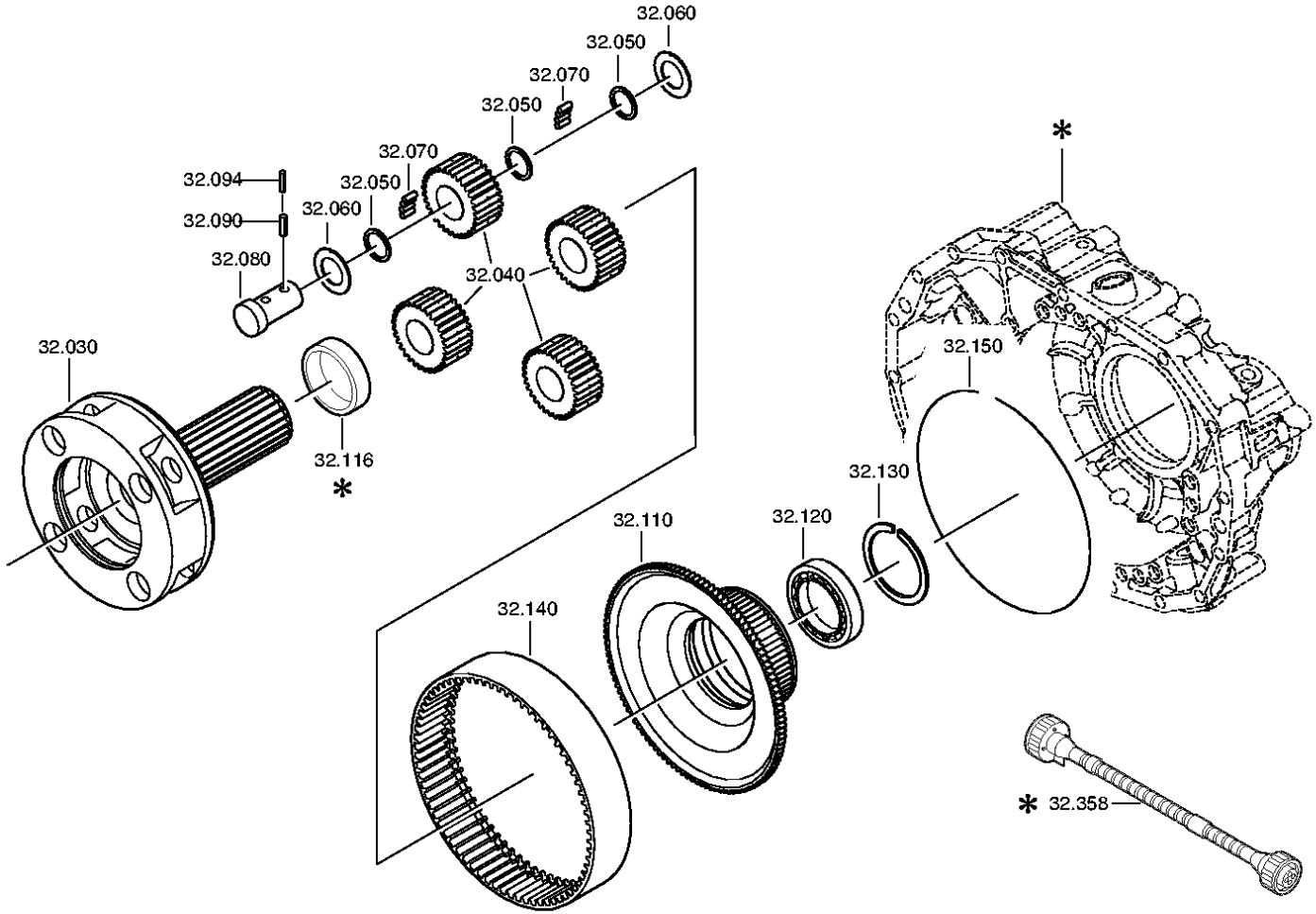

Material number: 1324.001.048 **9 S 1310 TO / KAMAZ PUBLIC JOINT STOCK COMPANY**

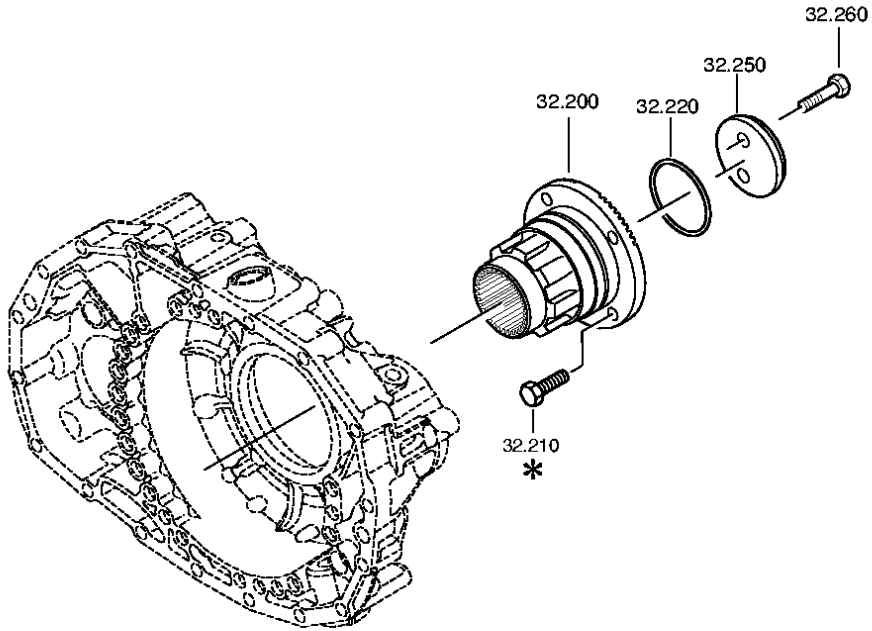

Material number: 1324.001.048 **9 S 1310 TO / KAMAZ PUBLIC JOINT STOCK COMPANY**

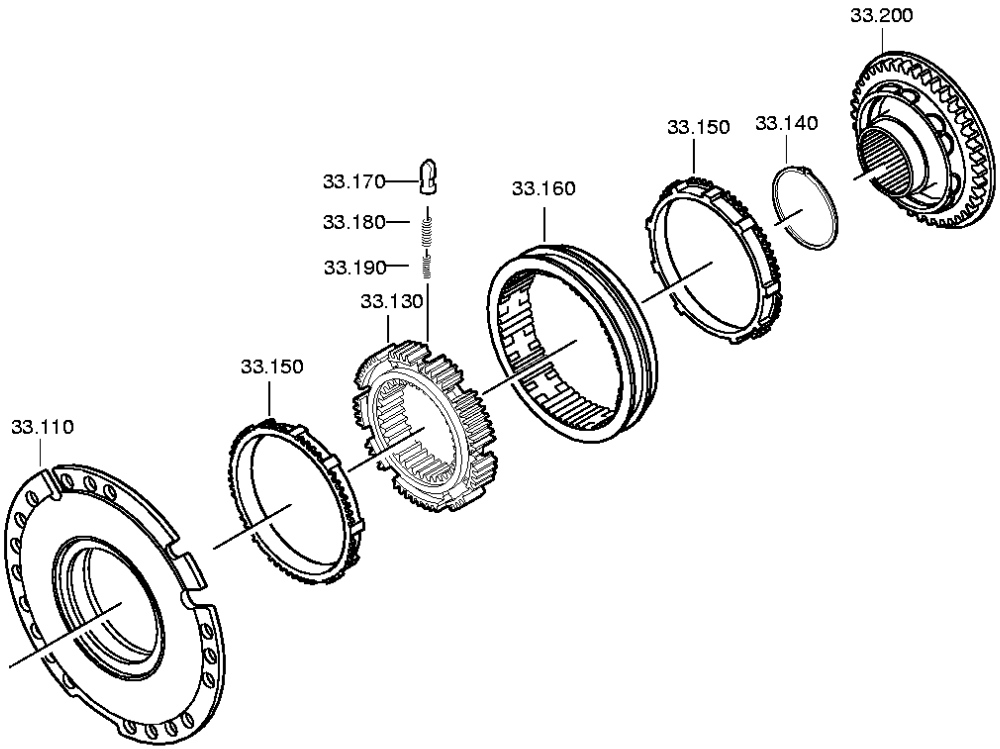

Material number: 1324.001.048 **9 S 1310 TO / KAMAZ PUBLIC JOINT STOCK COMPANY**

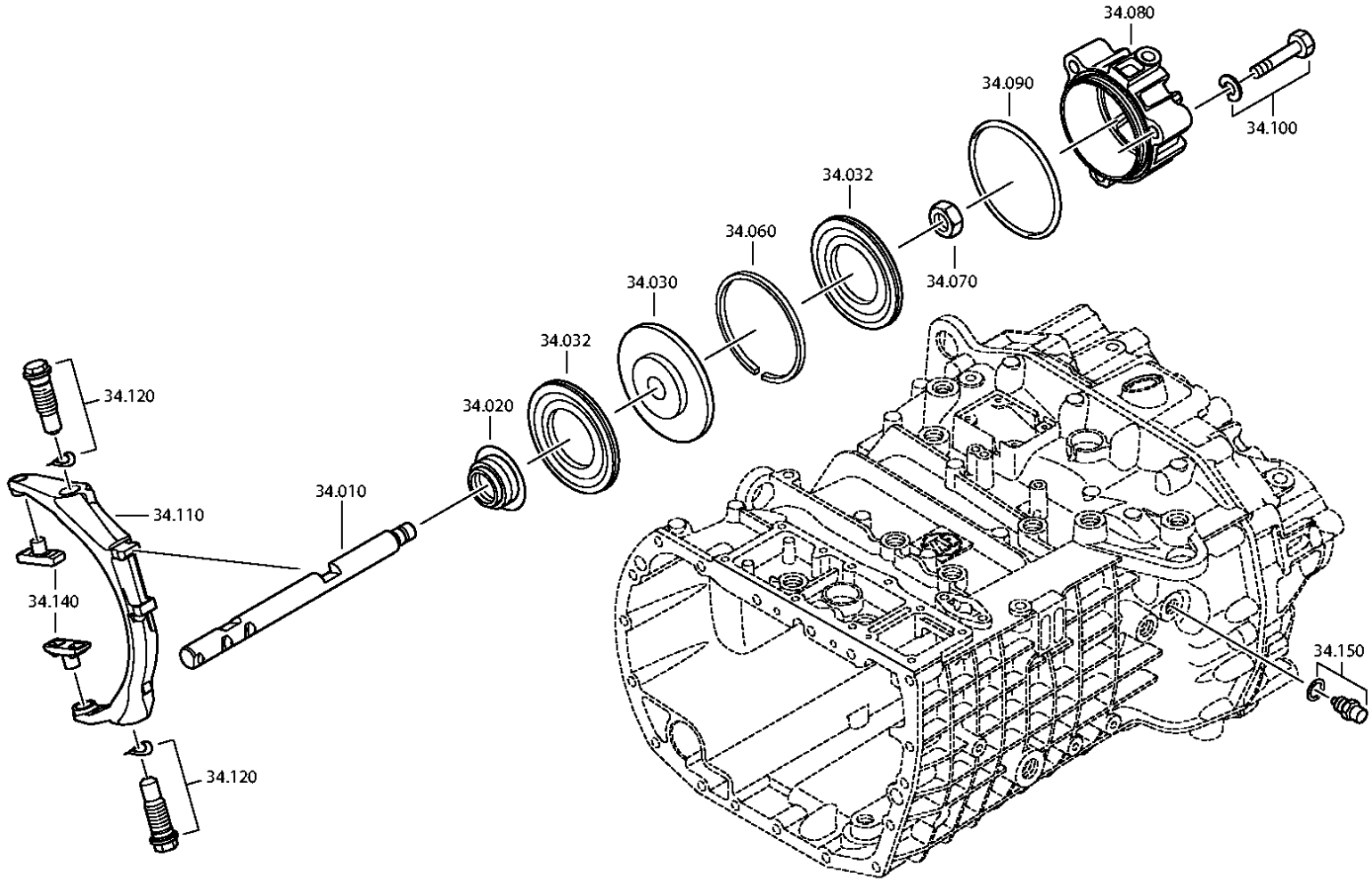

Material number: 1324.001.048 **9 S 1310 TO / KAMAZ PUBLIC JOINT STOCK COMPANY**

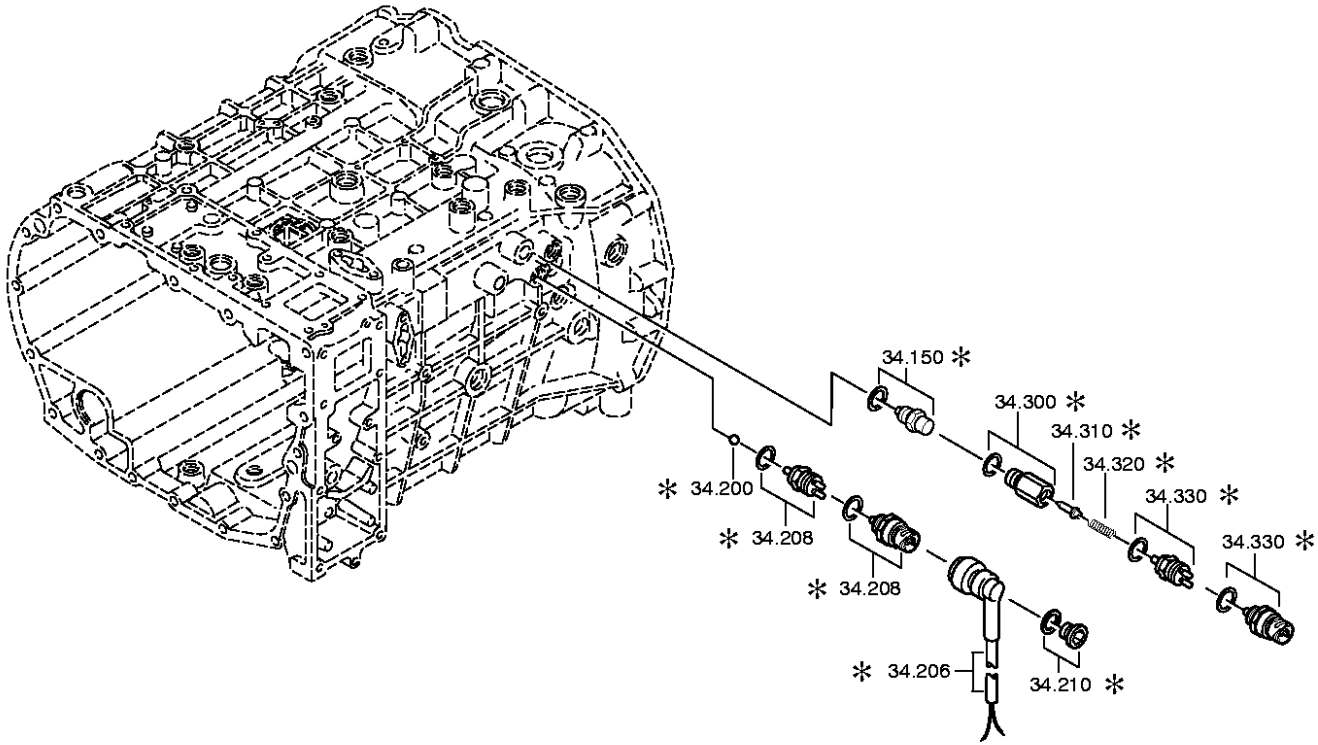

Material number: 1324.001.048 **9 S 1310 TO / KAMAZ PUBLIC JOINT STOCK COMPANY**

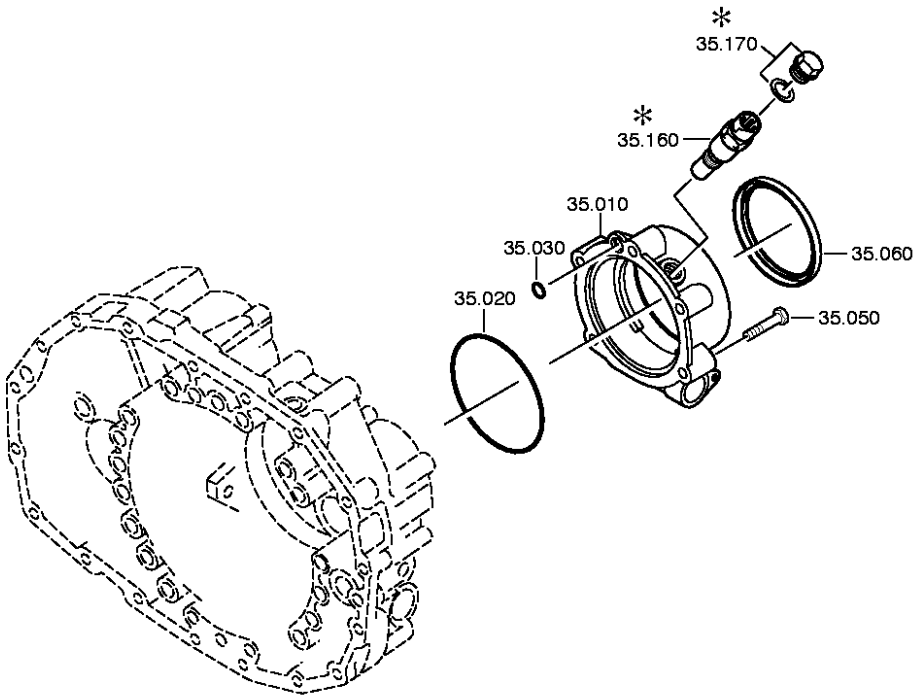

Material number: 1324.001.048 **9 S 1310 TO / KAMAZ PUBLIC JOINT STOCK COMPANY**

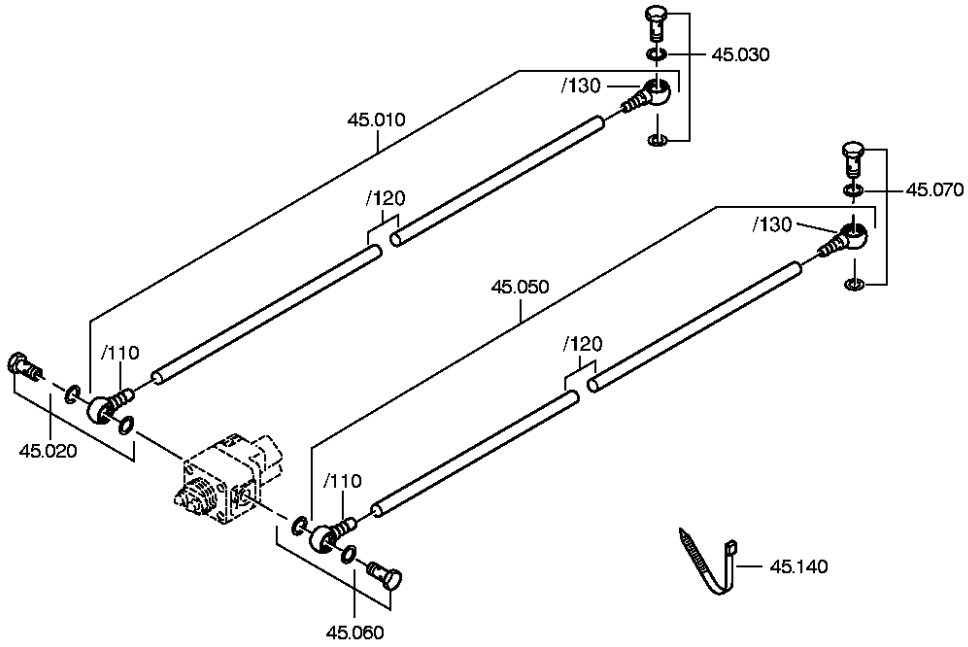

Material number: 1324.001.048 **9 S 1310 TO / KAMAZ PUBLIC JOINT STOCK COMPANY**

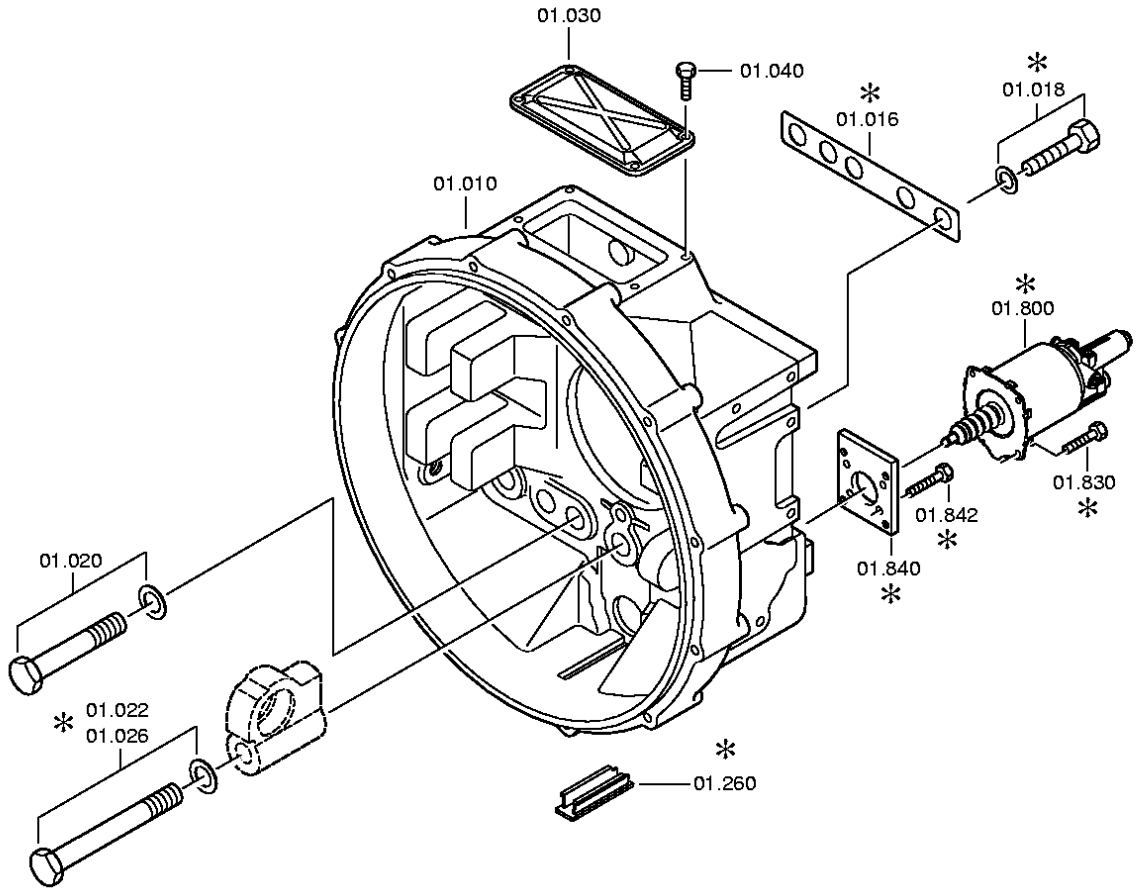
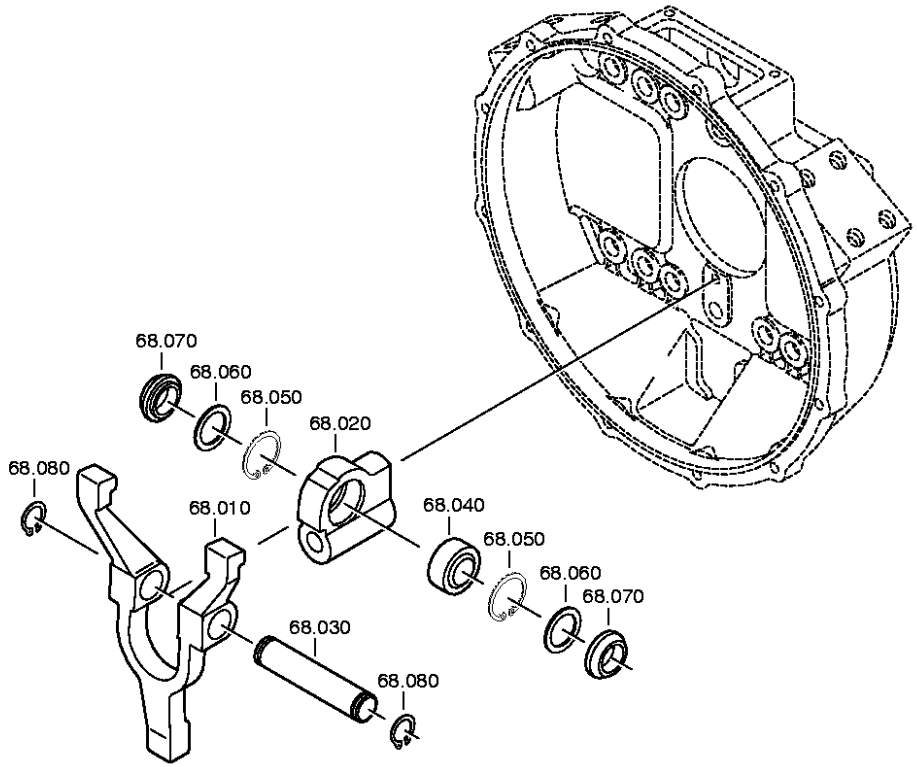
Material number: 1324.001.048 **9 S 1310 TO / KAMAZ PUBLIC JOINT STOCK COMPANY**